ICON
WHEELCHAIRS

Icon Wheelchairs
phone/fax: 888-461-5759
orders@iconwheelchairs.com

Ship To:
Name: _____
Address: _____
_____
_____
Phone: _____
Email: _____

Dealer: _____
Contact Info: _____

Is it possible for a wheelchair to be revolutionary? We think so. The Icon is adjustable to let you "dial-in" that perfect fit. You don't need to worry about having to choose permanent specifications that can never be changed after a chair is built.

Your body and your needs are always changing. Your Icon's geometry will change with you, ensuring a perfect fit right now, and for years to come.

Our suspension design allows it to be set to your exact weight. The compression and rebound can both be tuned to reduce fatigue and give you a custom ride over the bumps of everyday life. It also has a lock-out for those times when you don't want suspension.

The modularity of the Icon offers flexibility to change every component, including wheel sizes, and maintain the geometry that's best for you.

Standard features:
- Rear Suspension
- Full Adjustability
- Solid Seat *(Molded Laminate)*
- 25" (559) Spinergy Wire Wheels
- 4" Rollerblade-style Casters
- Nylon Back Upholstery

Base Price: $4295 USD

Upgrades: + $ _____

Accessories: + $ _____

Shipping:

☐ *North America ground - $75*

☐ *North America expedited - call*

☐ *Other - call*

Total: $ _____

Geometry		Selection	Range
Front Seat Height	(A)		*16-23"*
Rear Seat Height	(B)		*14.5-23"*
Seat Width	(C)		*12-18"*
Seat Depth	(D)		*14-18"*
Seat-to-Footrest	(E)		*15-22"*
Front Wing			*standard or narrow (-2")*
Center of Gravity	(F)		*0-4"*
Overall Length	(G)		*13-21"*
Backrest Height	(H)		*10-18"*
Rear Wheel Camber			*0, 2, 4, or 6°*
Rear Wheel Size			*24" (540) or 25" (559)*
Wheel Spacing	(K)		*0.5-1.5"*
Front Wheel Size			*3, 4, or 5"*
Back Angle			*-10 to +3°*
Shock Pressure			*0-265psi*

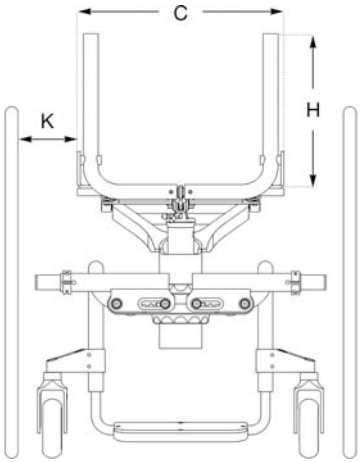

Rear

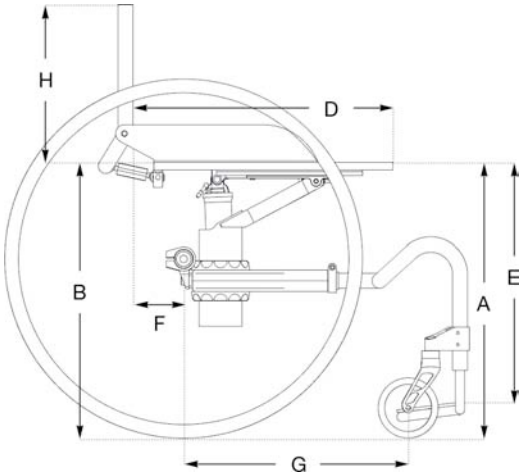

Side

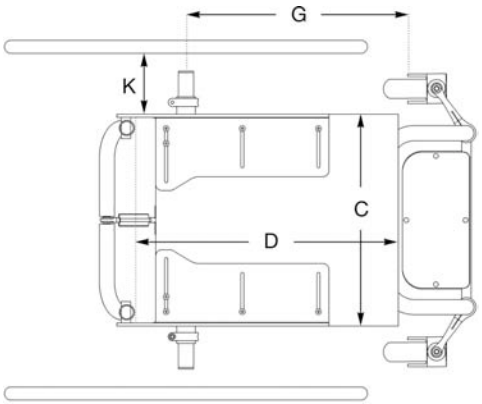

Top

ICON
WHEELCHAIRS

Dealer: _____
Contact Info: _____

Ship To:
Name: _____
Address: _____

UPGRADES

Wheels (Rear)	Price	Selection
Spinergy Wire	No Charge	☐ 24" ☐ 25"
Spinergy SPOX	$695	☐ 24" ☐ 25"
Spinergy LX	$895	☐ 24" ☐ 25"
Round Betty Dino	$895	☐ 24" ☐ 25"
Topolino CF	$1295	☐ 24" ☐ 25"

Wheels (Caster)		
Rollerblade Style	No Charge	☐ 4"
Frog Legs Epic Lexan Soft Roll	$53.98	☐ 4x1.4"
	$57.98	☐ 5x1.4"
Frog Legs Epic Aluminum Soft Roll	$99.98	☐ 3x1.4"
	$105.98	☐ 4x1.4"
	$113.98	☐ 5x1.4"

Seat	*HCPCS code E2231*	
Molded Laminate	No Charge	☐
Carbon Fiber	$675	☐

Air Shock	*HCPCS code E1015*	
RockShox Bar R	No Charge	☐
RockShox Ario RL	$210	☐

The **RockShox Bar R air shock** (260g, standard) as well as the **Ario RL** (210g, upgrade) both adjust to match rider weight, and both have adjustable rebound (the rate at which the shock returns after compression). The **Ario RL** is 50g lighter than the **Bar R** and adds the option for a remote lockout.

Both are extremely durable air spring systems. The internal pressure is adjusted through a single Schrader valve, simplifying suspension setup while retaining the light weight and plush ride quality.

Caster Forks	Price	Selection	
Frog Legs Ultra Sport Suspension Forks *HCPCS code E1015*	$319.99	☐	Elastomer-based shock absorption. Frog Legs casters required.
Frog Legs Uni-Tine Single-sided Forks	$159.99	☐	Minimalist & lightweight. Frog Legs casters required.

Backs	Size	Mount*	Contour & Price	Select
Icon Upholstery	[Backrest Height]	n/a	n/a	width:
ADI Carbon Fiber	Low (10")	☐ QR	2.5" – $745	width:
	Medium (13")	☐ QR	2.5" – $815	width:
	Standard (16")	☐ QR	2.5" – $880	width:
ADI Aluminum	Low (10")	☐ 2PP ☐ QR	☐ 2.5" – $610 ☐ 4" – $710	width:
	Medium (13")	☐ 2PP ☐ QR	☐ 2.5" – $625 ☐ 4" – $725	width:
	Standard (16")	☐ 2PP ☐ QR	☐ 2.5" – $640 ☐ 4" – $740	width:
	Tall (18")	☐ 2PP ☐ QR	☐ 2.5" – $655 ☐ 4" – $755	width:
	XTall (20")	☐ 2PP ☐ QR	☐ 2.5" – $670 ☐ 4" – $770	width:

ADI active contour backs: HCPCS code E2613; ADI deep contour backs: HCPCS code E2615

***2PP: 2 Point Pro**
AL only: hardware is stationary and has adjustable positioning of angle, depth, and width.

***QR: Quick Release**
Offers the ability to easily remove the back and has adjustable positioning of angle, depth, and width.

ADI Back Supports add extra stability and support over the standard upholstery. **Back support widths are available between 13-18" and can be selected independently of the Icon's seat width.** The weight of a 17" medium Carbon Fiber (CF) shell is approximately 27oz, while the same size Aluminum (AL) shell is approximately 38oz. CF backs have a 2.5" active contour depth. AL backs have the same 2.5" active contour, but are available with a 4" deep contour.

Icon's Carbon Fiber Seat upgrade offers 1.5lbs of weight savings when compared to the standard laminate seat, as well as providing extra vibration dampening that's characteristic of the carbon fiber.

ICON
WHEELCHAIRS

Dealer: _____
Contact Info: _____

Ship To:
Name: _____
Address: _____
_____
_____

For your reference. Copy onto page 1 when finished.

Upgrades Total: + $ _____

Accessories Total: + $ _____

ACCESSORIES

Sideguards	Price	Selection
Icon Sideguards	$175	☐
ADI Carbon Fiber Fixed Sideguards	$375	☐

Brakes		
Scissor Brakes	$155	☐
Push-to-Lock Brakes	$155	☐

Scissor Brakes & Push-to-Lock Brakes: HCPCS code E2206

Comfort & Safety			
Icon Removable Armrests	*HCPCS code E0973*	$325	☐
Icon Push Handles		$235	☐
Icon Anti-Tips	*HCPCS code E0971*	$175	☐
Icon Folding Back Option		$150	☐
Shock Pump by Planet Bike		$39.95	☐

Transfer Assist		
Icon Transfer Handles	$235	☐
Icon Crossbar	$175	☐